CISA

The Key to Security

Ingersoll Rand
Security Technologies

Passive Security

An intruder seeking to break open a door will in most cases choose to "attack" the lock cylinder using the tools of the trade: drills, pliers, lock picks and other lock-forcing tools.

Passive security is a "defensive" element because it protects against forcible entry tools with specific mechanisms that provide five types of resistance.

1 - Pushing resistance

CISA cylinders have a cam that protrudes from the cylinder body, to anchor them more firmly to the lock. This projecting cam, in addition to anchoring the cylinder more securely, also prevents it from being dislodged by a hammer blow.

2 - Drill resistance

Depending on the model, CISA cylinders incorporate one or more steel components in the cylinder which are designed to resist or delay attacks from a drill.

3 - Picking resistance

Intruders use lock picking tools to simulate the action of a key. Some high-security CISA cylinders have a design and pin configuration pattern that is specifically made to resist manipulation by a pick.

Bump resistant BKP

Special device which prevents the cylinder from being bumped

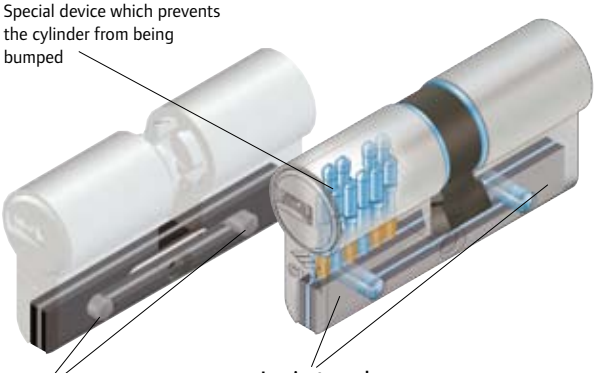

Nitrided carbon steel fixing pins

Laminate pack

6 rigid hardened steel and 1 flexible stainless steel cores provide flexural snap resistance up to 40% greater than conventional cylinders

Snap resistant (pulling)

Typically 40% increase in resistance to pulling the core compared to normal cylinders

4 - Snapping resistance

Some CISA cylinders incorporate solutions for enhanced resistance to snapping or tearing. A laminated strip of hardened steel and flexible stainless steel is incorporated into the cylinder's longitudinal axis to counteract such attacks. The unique patented laminated steel is also visible from both ends as an added visual deterrent.

5 - Bump resistance

Bumping of cylinders is becoming more of an issue throughout Europe, particularly as there is no sign of forcible entry for homeowners to claim on insurance. BKP patented device is fitted as standard on Astral S and AP3 systems.

Active Security

Who hasn't ever lost their house keys, or temporarily left them with someone who could have made a copy? Active security is "intelligent" precisely because it anticipates this type of problem, with solutions that enhance the security of the cylinder and prevent unauthorised duplication of the key.

Patented Key System

A key which is patented (AP3) cannot be freely reproduced. These solutions thus permit controlling the distribution of key blanks and providing a safer duplication service. Patented AP3 keys with an incorporated mobile element offer a greater guarantee against cloning.
AP3 keys can only be duplicated by CISA or authorised partners.

Security Card

Offers a high level of service personalisation, giving further protection to the end user. The CISA authorised duplication system is the perfect solution for ensuring that keys can only be duplicated with the owner's consent on presentation of the card.

C2000

The C2000 system provides a medium level of physical security without being overspecified and is therefore a more economical option for either single or master keyed systems.

Hardened steel pin and driver in first position protects from drilling

5 Pin key bitting system offering over 30,000 key differs

Anti pick profiled Brass pins and drivers

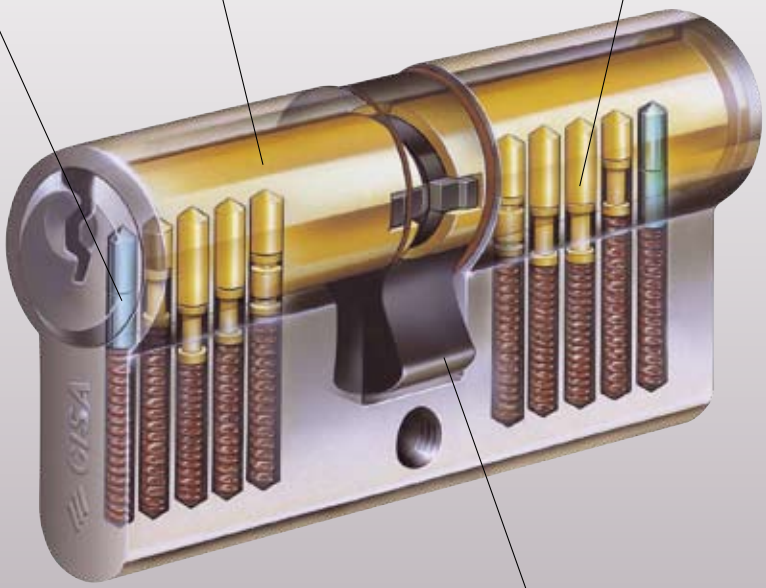

3 keys supplied as standard

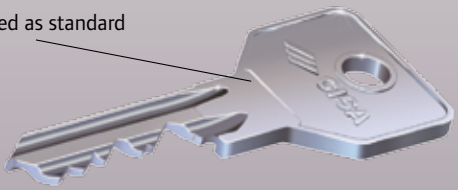

DIN standard Sintered steel cam provides push resistance to prevent the cylinder being forced out of the lockcase

Key Capacity	Durability	Finishes	EN 1303:2005		
1,000 excluding integrated section capacity	100,000 cycles	Satin Nickel Satin Brass	Attack Resist.	Durability	Key Security
			GRADE 0	GRADE 6	GRADE 4

Astral

The ultimate convenience solution for masterkey systems with the possibility of up to 63,000 different cylinders on a single system, this range is ideal for both small and large business premises.

10 Pin key bitting system offering over 1.6 million key differs

Anti pick profiled Brass pins and drivers

Hardened steel pin and driver in first position protects from drilling

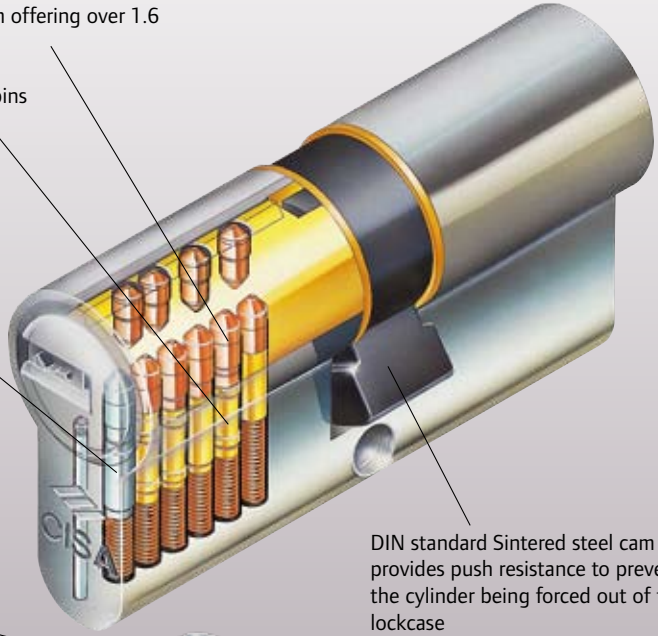

DIN standard Sintered steel cam provides push resistance to prevent the cylinder being forced out of the lockcase

Reversible flat key

A Code card ensures a high quality duplicate key

3 keys supplied as standard

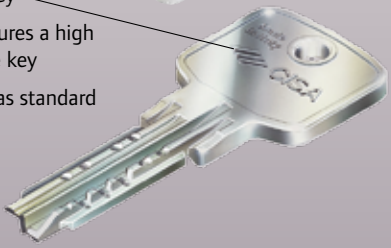

Key Capacity	Durability	Finishes	EN 1303:2005		
63,000 incl. passive pins	100,000 cycles	Satin Nickel Satin Brass	Attack Resist.	Durability	Key Security
			GRADE 0	GRADE 6	GRADE 6

Astral S

The Astral S provides the ideal solution against snapping thanks to its snap resistant core. Astral S cylinders are completely interchangeable with Astral so they can be used specifically where ultimate security is required.

10 Pin key bitting system produces over 1.6 million key differs

Clutch cam fitted as standard to allow operation even if the key has been left in the other side

Hardened steel pins and drivers protect from drilling

Special driver profile provides "pick protection"

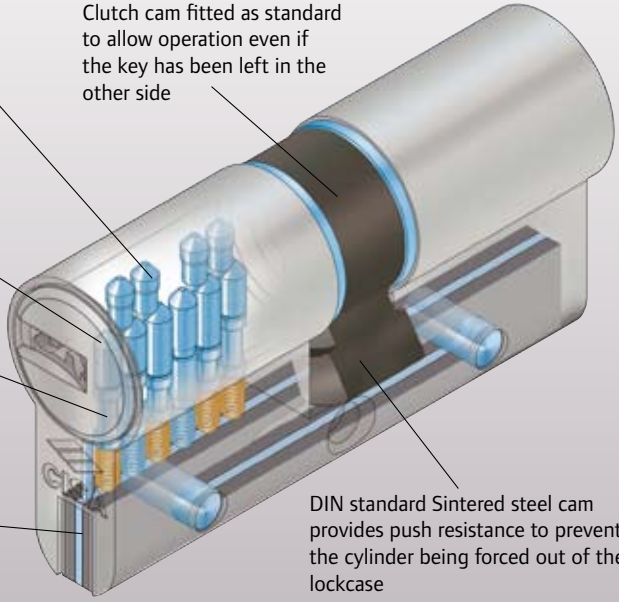

DIN standard Sintered steel cam provides push resistance to prevent the cylinder being forced out of the lockcase

BKP Bump resistant device fitted as standard

Patented laminated steel core that provides snap resistance to both flexural and pulling test. The core is also visible from both ends to provide a visual deterrent.

Reversible flat key

A Code card ensures a high quality duplicate key

3 keys supplied as standard

Key Capacity	Durability	Finishes	EN 1303:2005		
63,000 incl. passive pins	100,000 cycles	Satin Nickel Satin Brass	Attack Resist.	Durability	Key Security
			GRADE 1	GRADE 6	GRADE 6

AP3

The AP3 System is a sophisticated protected cylinder system which provides high levels of security and flexibility with patent protection up to 2019. Capable of producing over 132,000 cylinders per masterkey, the AP3 System is particularly suitable for large and complex masterkey applications where high security is essential such as secure hospitals, police facilities and banks. For residential as well as some commercial projects, the AP3 system offers a 3 in 1 keying solution on standard cylinders.

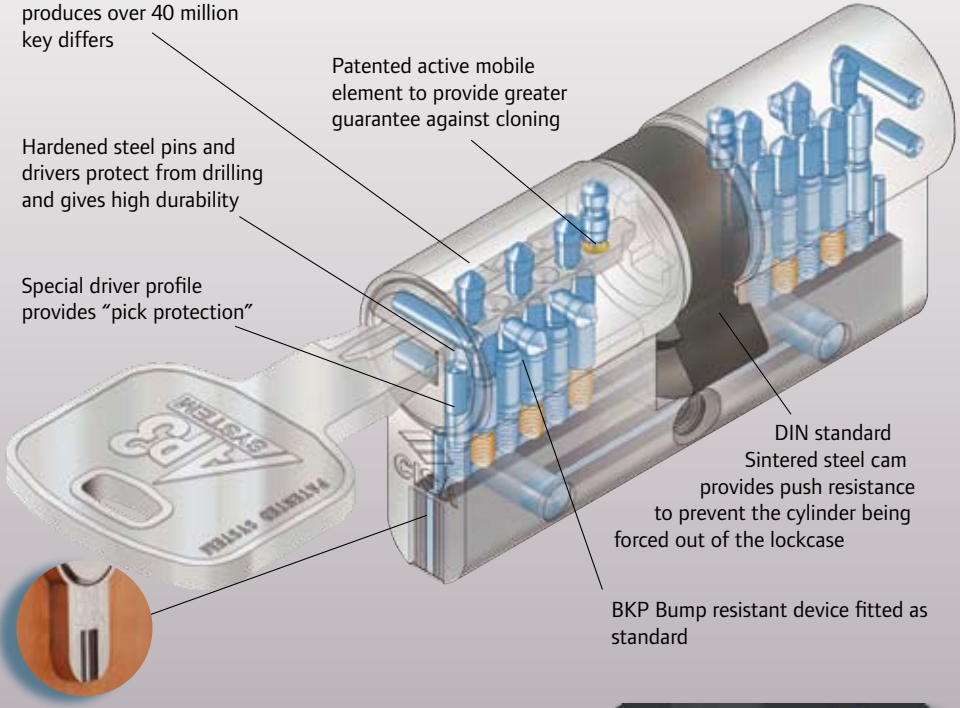

Patented laminated steel core that provides snap resistance to both flexural and pulling test. The core is also visible from both ends to provide a visual deterrent.

Reversible flat key

Patented mobile element ensures restriction of key blanks

A Security card ensures only CISA authorised additional keys are cut

3 keys supplied as standard

Key Capacity	Durability	Finishes	EN 1303:2005		
132,000	100,000 cycles	Satin Nickel Brass	Attack Resist.	Durability	Key Security
			GRADE 2	GRADE 6	GRADE 6

CISA

Ingersoll Rand Security Technologies is a leading global supplier of products and services that make environments safe, secure and productive.

CISA was established in Florence in 1926 by Luigi Bucci who patented the first electrically controlled lock. Today, CISA is committed to providing security solutions to safeguard both private and public properties. With a production capacity of 18 million cylinders per year, a department entirely devoted to the development of masterkeyed systems and professionals devoted to training.

For full information and prices please contact Ingersoll Rand Security Technologies.

Ingersoll Rand Security Technologies
Unit D2, The Waterfront, Newburn Riverside, Newcastle upon Tyne
NE15 8NZ
Tel: 0191 430 2500 Fax: 0191 229 1789
Email: info@ingersollrand.co.uk www.security.ingersollrand.co.uk